Diese Zeichnung darf ohne unsere Genehmigung weder kopiert, noch vervielfältigt, noch dritten Personen oder Konkurrenzfirmen zugängig gemacht werden.

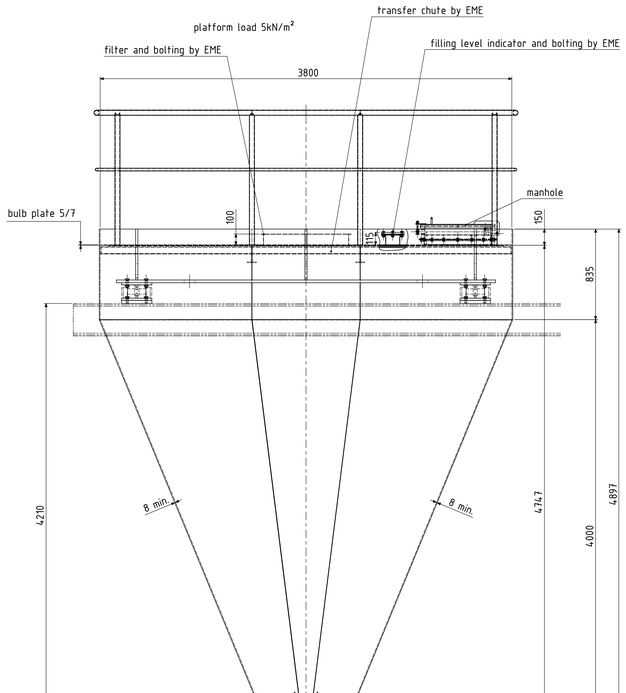

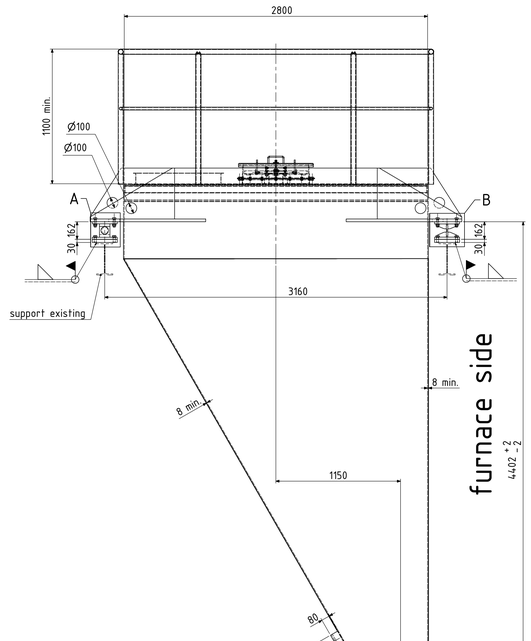

A (1 : 10)

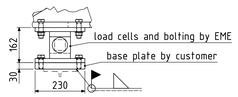

B (1 : 10)

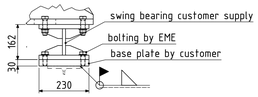

flange for slide gate (1x)

E-E (1 : 5)

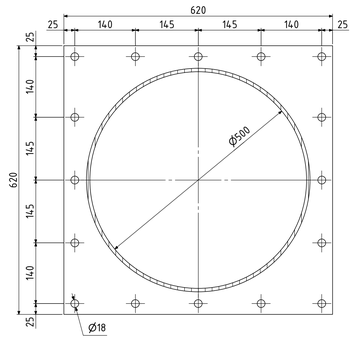

flange for filling level indicator (1x) (1:5)

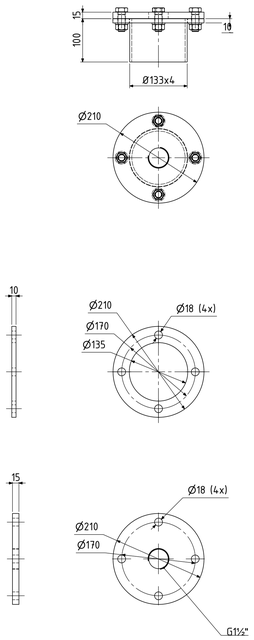

flange for filter (1x) (1:5)

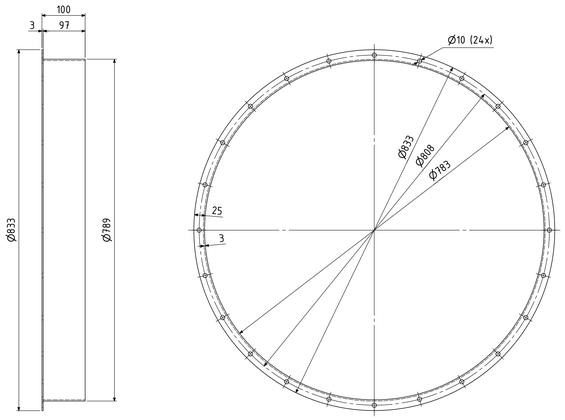

C-C (1 : 5)

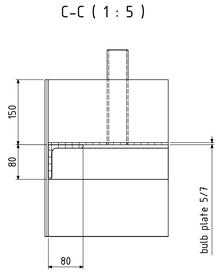

topview without support

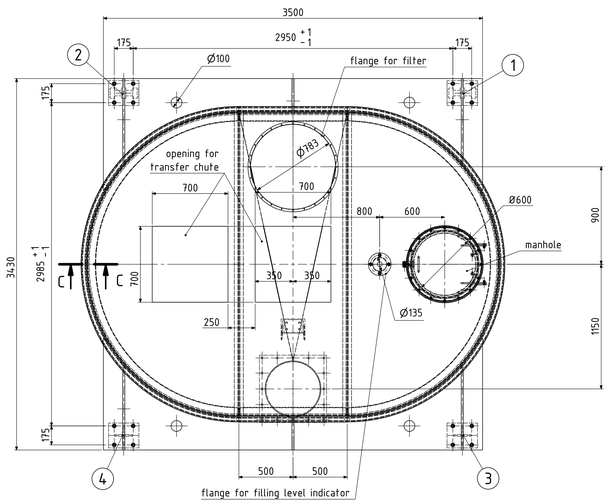

furnace side

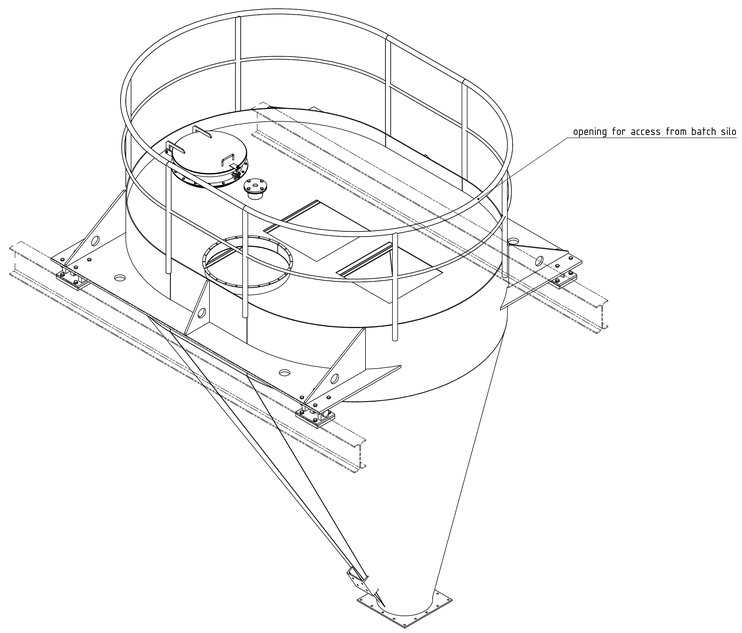

base plate (4x) (1:5)

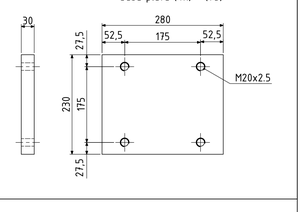

swing bearing (2x) (1:5)

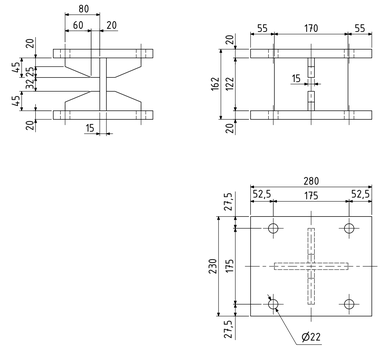

console for knocker (1x) (1:5)

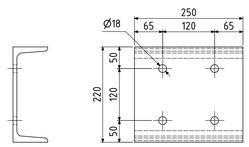

load points 1-4:

filling loads 80kN per point

loads caused by weight of silo
and weight of support according
statical calculation (by customer)

all weldings dust tight

wall thickness and profiles
acc. to statical calculation
by customer

fabrication drawings and
partlists by customer

earthquke extra charges
acc. to the region of
silo placement

steel material quality 1.0038 (S235JR)

EME pos. E10.02

All welding seams without dimensions continuous.
Fillet weld: for t1>t2 a = 0,7 x t2 ; for t1=t2 a = t1
Butt weld: t <= 3mm g = t ; t > 3mm g = t/2 + 1mm
Base material: S235JR(G2) / 1.0038
Welding: Fillet weld, single V, I-weld
Preparation of welds: single V, I
Welding procedure: 141(G) (135)
Additional material: DIN EN ISO 14341 - G4 Si
Alternative welding procedure: 3 steel (114)
Additional material: DIN EN ISO 2560 - E51 4Y - 3M3
Quality demands acc. to: DIN EN ISO 5817 - C
Position of welding: PA, PB, PF
General tolerances: DIN EN ISO 13920 - B
Preheating: -

rev.	date	name	revision
a	26.10.2018	Schmitz	steel quality and recommended steel thickness added

protection notice for restricting the use of documents: DIN ISO 16016 break all corners and edges | general tolerances: DIN ISO 2768-mK, DIN EN ISO 13920-B

Euro Projection | scale: 1:20 | paper size: A0 | project: | drawing drg.-001766

	date	name
drawn	27.09.2018	B. Schmitz
check	27.09.2018	B.Schmitz
appr.		

furnace silo 70.1 flow direction left side

EME Member of SORG Group

Il est interdit de couper ce dessin, de le multiplier, de le donner à des tiers ou des concurrents sans notre permission par écrit.

The drawing and delivery information must not be used in any way contrary to interests of EME Maschinenfabrik Lippe GmbH and may not be copied without written permission.