Diese Zeichnung darf ohne unsere Genehmigung weder kopiert, noch vervielfältigt, noch dritten Personen oder Konkurrenzfirmen zugängig gemacht werden.

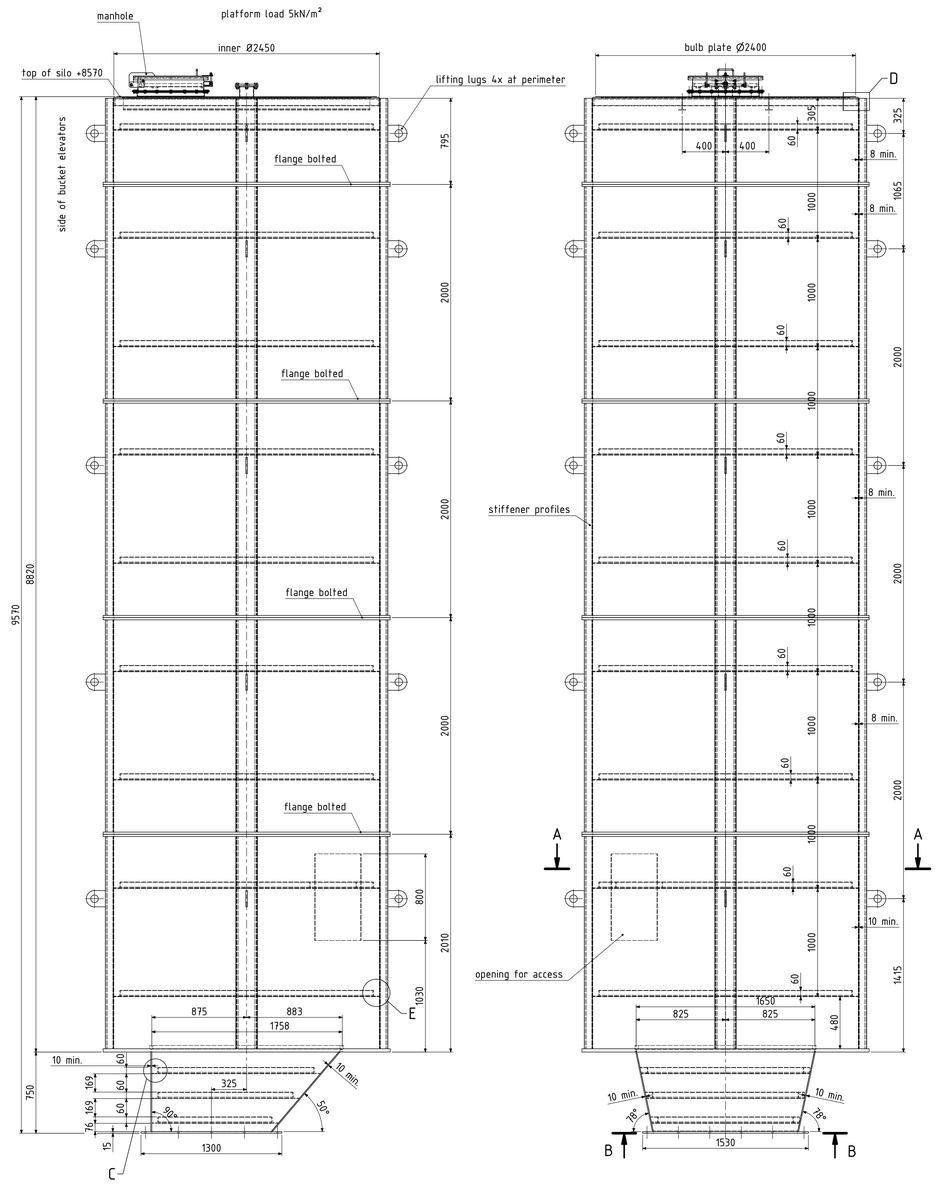

D (1 : 5)

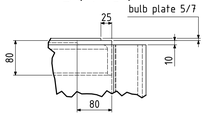

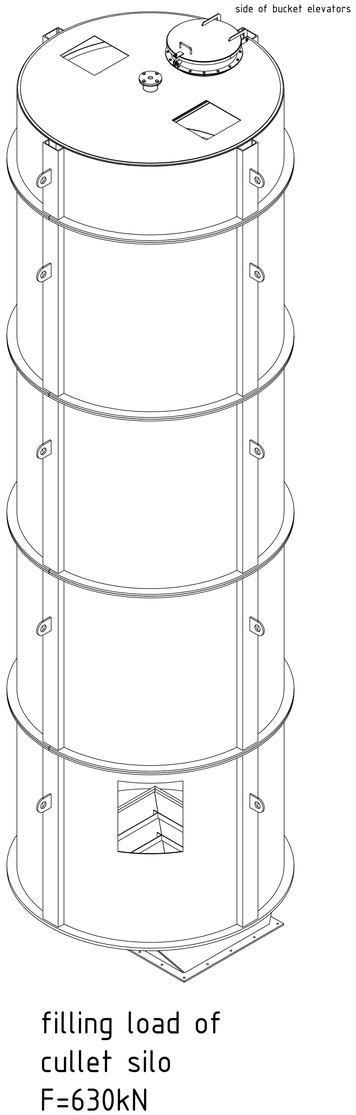

filling load of
cullet silo
F=630kN

B (1 : 10)

flange for transfer chute
transfer chute and bolting by EME

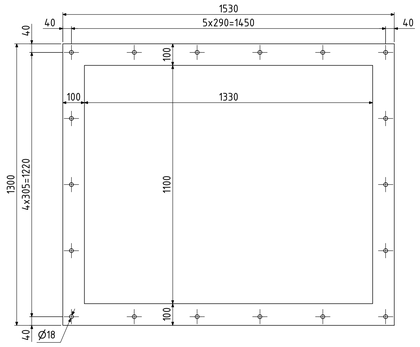

flange for filling level indicator (1x) (1:5)

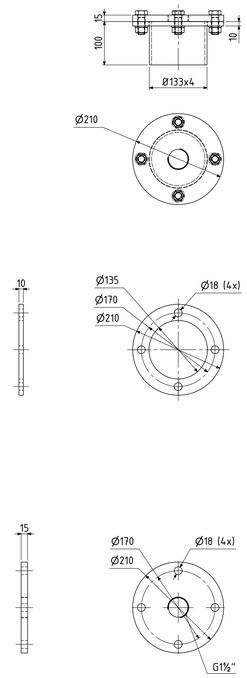

E (1 : 2)

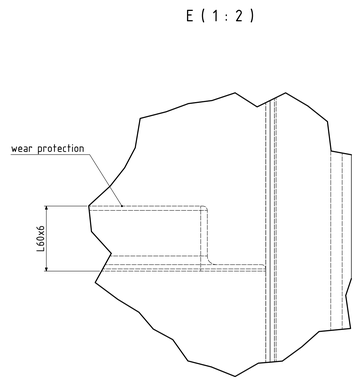

C (1 : 2)

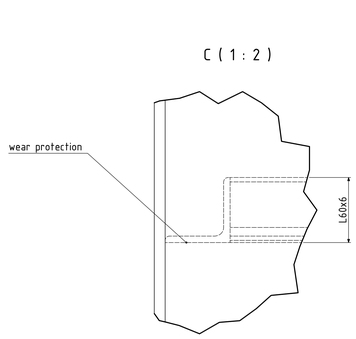

all weldings dust tight

wall thickness, profiles
lifting lugs etc. according to
statical calculation by
customer

fabrication drawings
and partlists by
customer

earthquake extra
charges according to the
region of silo placement

loads caused by weight of silo and
weight of support according to
statical calculation by customer

All not dimensioned bevels 5x45°

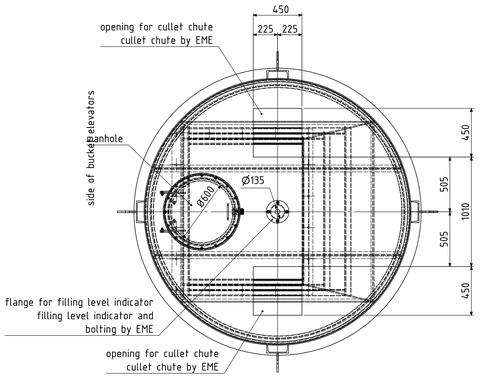

A-A (1 : 20)

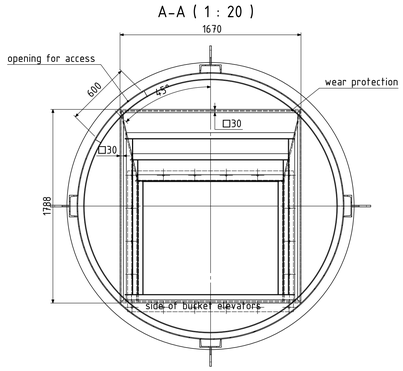

steel material quality 1.0038 (S235JR)

EME pos. E02.01

All welding seams without dimensions continuous.
Fillet weld: for t1>t2 a=0.7 x t2; for t1>t2>t2 a=0.5 x t2. Butt weld: t = s; t = 3mm; s = t.

Base material:	S235JR(J2 / 1.0038)
Weld seam: Fillet weld, single V, U-weld	Preparation of welds: single V, U
Welding procedure: 135 - Manual metal arc welding (111)	Additional material: 111 - SM 35
Alternative welding procedure: 1.Manual (111)	Additional material: DIN EN ISO 2560 - A35 mf - E43
Quality demands acc. to: ISO 5817 - C	Position of welding: PA, PB, PF
General tolerances: DIN EN ISO 13920 - B	Preheating:

rev.	date	name	revision
a	26.10.2018	Schmitz	steel quality and recommended steel thickness added

protection notice for restricting the use of documents: DIN ISO 16016 | break all corners and edges | general tolerances: DIN ISO 2768-mK, DIN EN ISO 13920-B

Euro Projection | scale: 1:20 | paper size: A0 | project: BP1802401 | drawing: drg.-001787

	date	name
drawn:	11.10.2018	Schmitz
check:	11.10.2018	Schmitz
appr.:		

EME Member of SORG Group

cullet silo

Ce dessin est la propriété de la société EME Maschinenfabrik und Stahlbau GmbH und darf weder ganz oder teilweise Dritten zugänglich gemacht werden.
This drawing and relevant information must not be used in any way contrary to interests of the EME Maschinenfabrik und Stahlbau GmbH and may not be copied without written permission.