Расположение светильников на мачте осветительной М

М 1:50

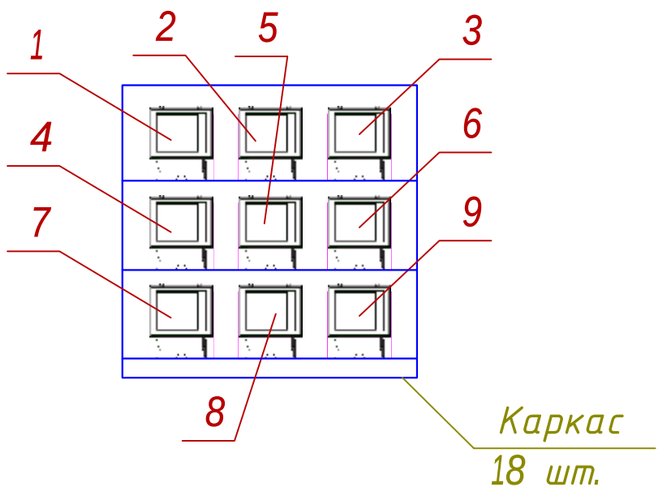

Расположение светильников на опоре осветительной

М 1:50

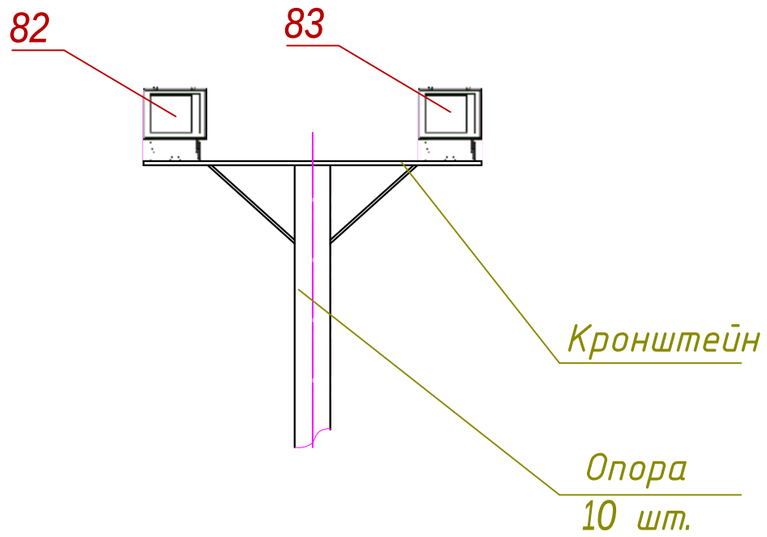

Светильник Ж019В

М 1:10

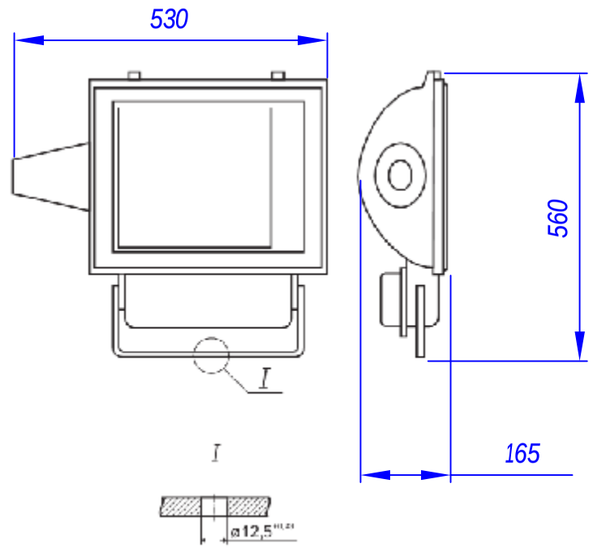

Координаты расположения светильников на мачтах осветительных М1 - М9

М4.1

№	Позиция [m] X	Y	Z	Вращ-е [°] X	Y	Z
1	886.378	1258.427	-49.450	72.0	0.0	-85.0
2	886.532	1258.470	-48.667	72.0	0.0	85.0
3	886.688	1258.511	-47.884	72.0	0.0	-85.0
4	886.446	1258.578	-49.450	72.0	0.0	85.0
5	886.700	1258.770	-48.667	72.0	0.0	-85.0
6	886.954	1258.722	-47.884	72.0	0.0	-85.0
7	886.518	1257.836	-49.450	72.0	0.0	-85.0
8	886.768	1257.921	-48.667	72.0	0.0	85.0
9	887.022	1257.948	-47.884	72.0	0.0	85.0

М4.2

138	865.689	1262.850	-49.450	72.0	0.0	-85.0
139	865.809	1262.877	-48.667	72.0	0.0	-85.0
140	865.928	1263.904	-47.884	72.0	0.0	-85.0
141	866.080	1262.973	-49.450	72.0	0.0	-85.0
142	866.300	1262.300	-48.667	72.0	0.0	-85.0
143	866.520	1262.427	-47.884	72.0	0.0	-85.0
144	866.471	1261.456	-49.450	72.0	0.0	-85.0
145	866.691	1261.633	-48.667	72.0	0.0	-85.0
146	866.911	1261.700	-47.884	72.0	0.0	-85.0

М9.2

10	1590.785	2478.675	-51.572	85.0	0.0	130.0
11	1590.791	2478.621	-50.867	85.0	0.0	130.0
12	1590.743	2478.565	-50.162	85.0	0.0	130.0
13	1590.948	2478.947	-51.572	85.0	0.0	130.0
14	1590.928	2478.865	-50.867	85.0	0.0	130.0
15	1590.907	2478.821	-50.162	85.0	0.0	130.0
16	1591.313	2479.215	-51.572	85.0	0.0	130.0
17	1591.292	2479.157	-50.867	85.0	0.0	130.0
18	1591.270	2479.098	-50.162	85.0	0.0	130.0

М9.1

102	689.691	2481.600	-51.572	85.0	0.0	130.0
103	689.644	2481.561	-50.867	85.0	0.0	130.0
104	689.597	2481.521	-50.162	85.0	0.0	130.0
105	688.558	2482.20	-51.572	85.0	0.0	130.0
106	688.511	2482.161	-50.867	85.0	0.0	130.0
107	688.464	2482.121	-50.162	85.0	0.0	130.0
108	688.964	2482.90	-51.572	85.0	0.0	130.0
109	688.917	2482.76	-50.867	85.0	0.0	130.0
110	688.870	2482.72	-50.162	85.0	0.0	130.0

М1.1

37	222.472	2047.341	73.418	80.0	0.0	-80.0
38	222.512	2047.388	74.224	80.0	0.0	-80.0
39	222.752	2047.391	75.031	80.0	0.0	-80.0
40	222.007	2045.575	73.418	80.0	0.0	-80.0
41	222.747	2046.800	74.224	80.0	0.0	-80.0
42	222.987	2046.825	75.031	80.0	0.0	-80.0
43	222.742	2045.809	73.418	80.0	0.0	90.0
44	222.982	2045.834	74.224	80.0	0.0	-80.0
45	223.022	2045.858	75.031	80.0	0.0	-80.0

М1.2

111	222.226	2035.331	73.418	80.0	0.0	100.0
112	222.465	2035.389	74.224	80.0	0.0	-100.0
113	222.609	2035.341	75.031	80.0	0.0	-100.0
114	222.190	2034.620	73.418	80.0	0.0	-100.0
115	222.229	2034.600	74.224	80.0	0.0	-100.0
116	222.469	2034.573	75.031	80.0	0.0	-100.0
117	222.666	2033.859	73.418	80.0	0.0	-100.0
118	222.186	2033.854	74.224	80.0	0.0	-100.0
119	222.586	2033.839	75.031	80.0	0.0	-100.0

М2.1

№	Позиция [m] X	Y	Z	Вращ-е [°] X	Y	Z
73	472.195	1827.363	59.179	80.0	0.0	-100.0
74	472.336	1827.370	60.003	80.0	0.0	-100.0
75	472.506	1827.378	60.821	80.0	0.0	-100.0
76	472.326	1826.312	59.179	80.0	0.0	-100.0
77	472.400	1826.500	60.003	80.0	0.0	100.0
78	472.471	1826.588	60.821	80.0	0.0	-100.0
79	472.194	1825.342	59.179	80.0	0.0	-100.0
80	472.264	1825.528	60.003	80.0	0.0	-100.0
81	472.330	1825.817	60.821	80.0	0.0	100.0

М2.2

174	471.964	1829.868	59.178	80.0	0.0	-80.0
175	471.964	1829.870	60.000	80.0	0.0	80.0
176	472.335	1829.863	60.821	80.0	0.0	-80.0
177	472.328	1829.968	59.178	80.0	0.0	-80.0
178	472.100	1829.100	60.000	80.0	0.0	80.0
179	472.171	1829.119	60.821	80.0	0.0	-80.0
180	472.165	1829.317	59.178	80.0	0.0	-80.0
181	472.336	1829.330	60.000	80.0	0.0	80.0
182	472.336	1829.342	60.821	80.0	0.0	80.0

М3.1

55	737.823	1632.785	49.452	76.0	0.0	85.0
56	737.085	1632.815	48.557	76.0	0.0	85.0
57	737.248	1633.832	-47.571	76.0	0.0	-85.0
58	737.887	1633.815	49.452	76.0	0.0	85.0
59	737.103	1633.034	48.557	76.0	0.0	85.0
60	737.318	1633.053	-47.571	76.0	0.0	-85.0
61	737.958	1632.237	-49.452	76.0	0.0	-85.0
62	737.172	1632.255	48.557	76.0	0.0	85.0
63	737.384	1632.277	-47.571	76.0	0.0	-85.0

М3.2

120	735.344	1637.771	-49.452	76.0	0.0	-50.0
121	735.506	1637.877	-48.667	76.0	0.0	-50.0
122	735.664	1637.984	-47.87	76.0	0.0	-50.0
123	735.715	1637.083	-49.452	76.0	0.0	-50.0
124	735.900	1637.200	48.667	76.0	0.0	50.0
125	736.062	1637.307	47.87	76.0	0.0	50.0
126	736.126	1636.416	-49.452	76.0	0.0	-50.0
127	736.321	1636.523	48.667	76.0	0.0	50.0
128	736.476	1636.629	-47.87	76.0	0.0	-50.0

М6.1

№	Позиция [m] X	Y	Z	Вращ-е [°] X	Y	Z
47	1242.782	844.225	61.820	72.0	0.0	66.0
48	1242.888	844.377	-61.044	72.0	0.0	-66.0
49	1243.293	843.006	62.596	72.0	0.0	66.0
50	1243.500	843.200	61.820	72.0	0.0	66.0
51	1243.707	843.345	-61.044	72.0	0.0	-66.0
52	1244.012	842.029	-62.596	72.0	0.0	-66.0
53	1244.218	842.174	-61.820	72.0	0.0	-66.0
54	1244.425	842.319	-61.044	72.0	0.0	-66.0
55	739.823	1635.785	-49.452	72.0	0.0	-85.0

М6.2

156	1299.123	848.212	-62.596	72.0	0.0	-30.0
157	1299.274	848.418	-61.820	72.0	0.0	30.0
158	1299.413	848.625	-61.044	72.0	0.0	-30.0
159	1249.100	847.450	-62.596	72.0	0.0	-30.0
160	1249.500	847.700	-61.820	72.0	0.0	-30.0
161	1250.445	847.907	-61.044	72.0	0.0	-30.0
162	1241.161	846.175	-62.596	72.0	0.0	-30.0
163	1241.625	846.982	-61.820	72.0	0.0	-30.0
164	1241.471	847.188	-61.044	72.0	0.0	-30.0

М8.1

28	1359.636	544.872	52.426	72.0	0.0	30.0
29	1359.810	545.171	-51.718	72.0	0.0	-30.0
30	1359.825	545.371	51.010	72.0	0.0	30.0
31	1360.855	544.401	52.426	72.0	0.0	-30.0
32	1360.800	544.600	-51.718	72.0	0.0	-30.0
33	1360.915	544.799	51.010	72.0	0.0	30.0
34	1361.875	543.823	52.426	72.0	0.0	-30.0
35	1361.790	544.029	-51.718	72.0	0.0	-30.0
36	1361.905	544.225	-51.010	72.0	0.0	-30.0

М8.2

196	1354.704	547.374	-52.426	72.0	0.0	-15.0
197	1354.704	547.596	-51.718	72.0	0.0	-15.0
198	1354.823	547.119	-51.010	72.0	0.0	-15.0
199	1355.886	547.20	-52.426	72.0	0.0	15.0
170	1355.927	547.123	-51.718	72.0	0.0	-15.0
171	1356.912	546.783	52.426	72.0	0.0	15.0
172	1358.971	547.506	-51.718	72.0	0.0	-15.0
173	1357.031	547.427	-51.010	72.0	0.0	-15.0

М7.2

№	Позиция [m] X	Y	Z	Вращ-е [°] X	Y	Z
19	1277.952	1052.400	-200.716	75.0	0.0	-75.0
20	1278.158	1052.640	-199.920	75.0	0.0	-75.0
21	1278.364	1052.880	-199.125	75.0	0.0	-75.0
22	1278.277	1051.176	-200.716	75.0	0.0	-75.0
23	1278.483	1051.336	-199.920	75.0	0.0	75.0
24	1278.689	1051.565	-199.125	75.0	0.0	-75.0
25	1278.601	1050.065	-200.716	75.0	0.0	-75.0
26	1278.807	1050.120	-199.920	75.0	0.0	75.0
27	1279.013	1050.176	-199.125	75.0	0.0	-75.0

М7.1

147	1277.770	1047.536	-200.716	75.0	0.0	-100.0
148	1277.330	1047.799	-199.920	75.0	0.0	-100.0
149	1277.590	1047.762	-199.125	75.0	0.0	-100.0
150	1276.952	1045.300	-200.716	75.0	0.0	-100.0
151	1277.152	1045.368	-199.920	75.0	0.0	-100.0
152	1277.372	1045.329	-199.125	75.0	0.0	-100.0
153	1276.135	1045.370	-200.716	75.0	0.0	-100.0
154	1276.915	1045.533	-199.920	75.0	0.0	-100.0
155	1277.135	1045.296	-199.125	75.0	0.0	-100.0

М5.1

64	959.105	1629.590	-169.914	72.0	0.0	-85.0
65	959.359	1629.572	-169.130	72.0	0.0	-85.0
66	959.619	1629.534	-168.347	72.0	0.0	-85.0
67	969.174	1627.511	-169.914	72.0	0.0	-85.0
68	969.427	1627.533	-169.130	72.0	0.0	85.0
69	969.687	1627.555	-168.347	72.0	0.0	-85.0
70	969.947	1626.731	-169.914	72.0	0.0	-85.0
71	969.190	1626.751	-169.130	72.0	0.0	-85.0
72	969.446	1626.773	-168.347	72.0	0.0	-85.0

М5.2

129	957.689	1630.450	-169.914	72.0	0.0	-80.0
130	957.906	1630.577	-169.130	72.0	0.0	-80.0
131	958.029	1630.704	-168.347	72.0	0.0	-80.0
132	957.680	1629.773	-169.914	72.0	0.0	-80.0
133	958.200	1629.900	-169.130	72.0	0.0	-80.0
134	958.420	1630.027	-168.347	72.0	0.0	-80.0
135	958.671	1629.086	-169.914	72.0	0.0	-80.0
136	958.891	1629.223	-169.130	72.0	0.0	-80.0
137	959.111	1629.360	-168.347	72.0	0.0	-80.0

Координаты расположения светильников на опорах осветительных

№	Позиция [m] X	Y	Z	Вращ-е [°] X	Y	Z
О2						
82	421.782	2726.321	54.193	80.0	0.0	-80.0
83	421.211	2724.895	54.193	80.0	0.0	-130.0
О1						
84	873.905	2629.583	54.193	80.0	0.0	-75.0
85	873.355	2628.157	54.193	80.0	0.0	-120.0
О6						
86	1684.848	2951.600	-1.063	80.0	0.0	-112.0
87	1684.065	2950.175	-1.063	80.0	0.0	90.0
О7						
88	1900.955	2885.805	-1.063	80.0	0.0	70.0
89	1900.570	2884.380	-1.063	80.0	0.0	-150.0
О5						
90	1703.596	2748.153	-14.442	80.0	0.0	-170.0
91	1703.45	2746.757	-14.442	80.0	0.0	90.0
О4						
92	1730.898	2594.500	-28.635	80.0	0.0	75.0
93	1729.345	2594.077	-28.635	80.0	0.0	-110.0
О3						
94	1465.757	2682.284	-47.222	80.0	0.0	80.0
95	1465.206	2680.859	-47.222	80.0	0.0	-110.0
О8						
96	1520.700	2624.200	-28.635	80.0	0.0	165.0
97	1530.352	2622.938	-28.635	80.0	0.0	90.0
О9						
98	1976.758	2321.291	-11.627	80.0	0.0	75.0
99	1976.208	2322.638	-11.627	80.0	0.0	-100.0
О10						
100	2038.526	2519.455	-11.627	80.0	0.0	70.0
101	2035.975	2518.033	-11.627	80.0	0.0	150.0